REVISIONS					
REV	DESCRIPTION	DRN	CHK	APPD	DATE
REV 00					

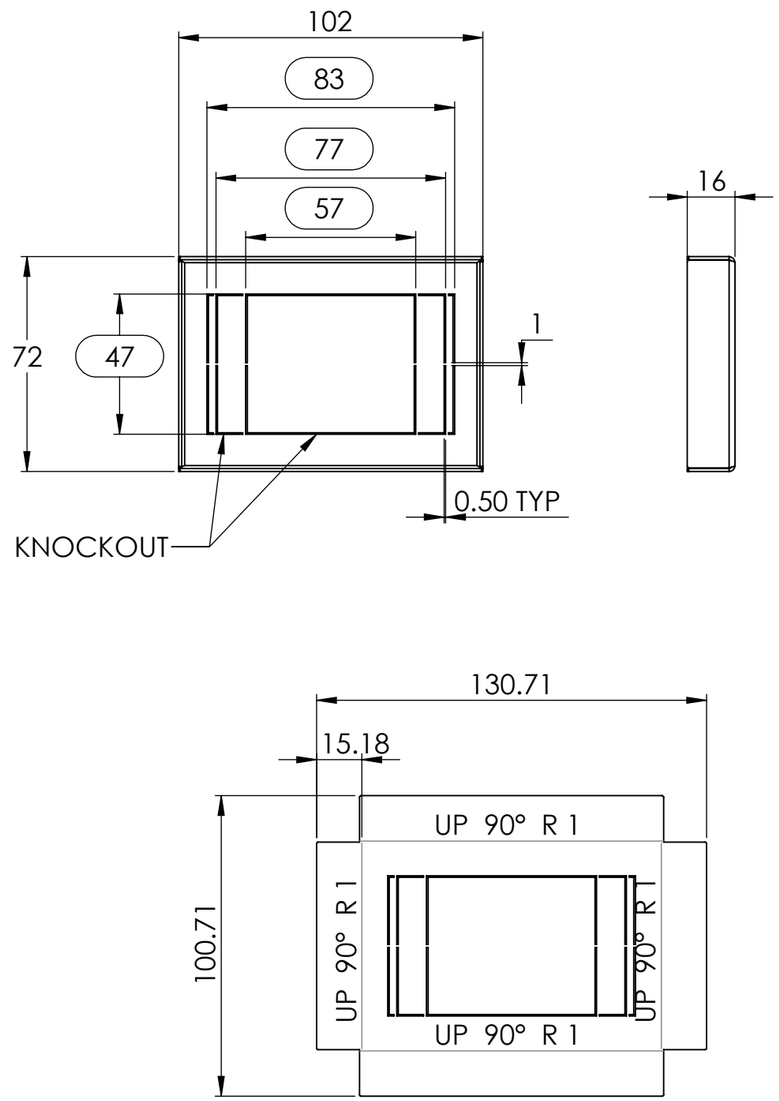

NOTES - UNLESS OTHERWISE SPECIFIED:

1. FINISH: POWDER COATED - FRAME - 7035, ALL COVERS - 7016 (TEXTURE)
2. DIMENSIONS ARE TO BE INTERPRETED AS PER ASME Y14.5M - 1994.
3. ALL DIMENSIONS APPLY AFTER FINISHING.
4. PART TO BE CLEAN AND FREE OF ALL SHARP EDGES BURRS, CHIPS, SHAVINGS AND OILS BOTH INTERNALLY AND EXTERNALLY.
5. ALL BEND RADIUS AND RELIEFS TO BE MINIMUM.
6. ALL DIMENSIONS ARE IN MM.
7. UNLESS OTHERWISE SPECIFIED DIMENSIONS REFER DXF DRAWING.

SUPERSEDES:

MATERIAL: CRCA

WEIGHT: 94.59G THK: 1MM

FINISH: SEE NOTES

TOLERANCES UNLESS OTHERWISE SPECIFIED

LINEAR DIMENSION							
0.5-3	3-6	6-30	30-120	120-400	400-1000	1000-2000	2000-4000
±0.5	±0.5	±1	±2	±3	±4	±5	±10

ANGLER DIMENSION					EXTERNAL RADII & CH		
0-10	10-50	50-120	120-400	OVER 400	0.5 - 3	3 - 6	OVER 6
±1°	±0.30°	±0.30°	±0.10°	±0.5°	±0.2	±0.5	±1

	NAME	DATE/SIGN
DRAWN	SUDHAGAR	08.10.2024
CHK'D		
APPV'D	BALRAM	

STATUS: REV 00

THIRD ANGLE PROJECTION:

Fuji Electric

DOC TYPE: MECHANICAL DRAWING

PRODUCT: 12-15KVA SCVS DM DG

TITLE: MCB CUTOUT COVER

DWG NO: RCAB00958R0-05_02

SIZE: A3

1:2

PROPERTY AND CONFIDENTIAL : THE INFORMATION CONTAINED IS THIS DRAWING IS THE SOLE PROPERTY OF CONSUL NEOWATT POWER SOLUTIONS PVT LTD. ANY REPRODUCTION IN PART OR AS A WHOLE WITHOUT THE WRITTEN PERMISSION OF CONSUL NEOWATT POWER SOLUTIONS PVT LTD IS PROHIBITED.