REVISIONS					
REV	DESCRIPTION	DRN	CHK	APPD	DATE
REV 03	VARIAC LEG	AJ			19.12.2018

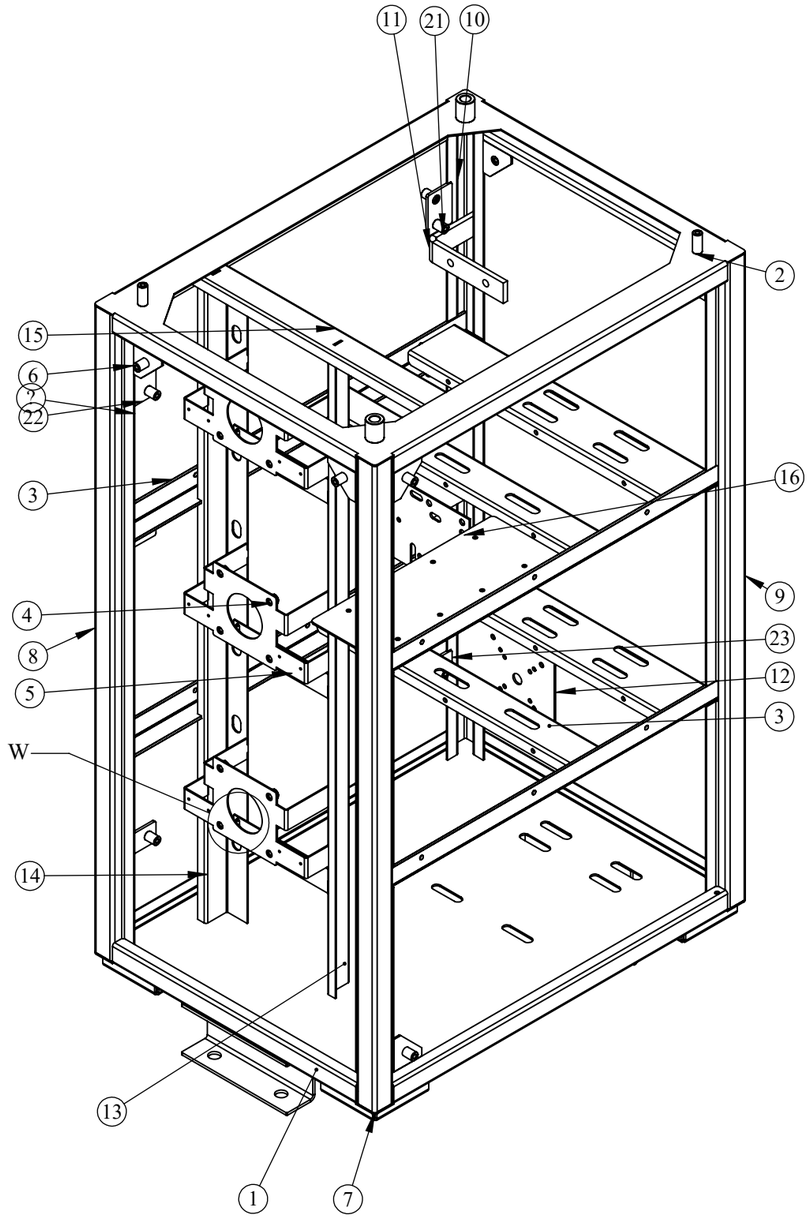

ITEM NO.	PARTNO	DESCRIPTION	QTY.	REVISION
1	RCAB00958R4-01-01	BOTTOM PLATE ASSY	1	REV 04
2	RCAB00958R4-01-02	TOP FRAME ASSY	1	REV 04
3	RCAB00958R4-01-03	MIDDLE FRAME 1 ASSY	2	REV 04
4	RCAB00958R0-01-05	MOTOR CLAMP ASSY	3	REV 00
5	RCAB00958R1-01-06	SMC PLATE ASSY	3	REV 01
6	RCAB00958R0-01-07	CORNER PIECE ASSY 1	6	REV 00
7	RCAB00958R0-01-00_01	VERTICAL LEG FR	1	REV 00
8	RCAB00958R0-01-00_02	VERTICAL LEG FL	1	REV 00
9	RCAB00958R0-01-00_03	VERTICAL LEG BR	1	REV 00
10	RCAB00958R0-01-00_04	VERTICAL LEG BL	1	REV 00
11	RCAB00958R1-01-00_05	MCB CLAMP	1	REV 01
12	RCAB00958R0-01-00_06	BY PASS PLATE	1	REV 00
13	RCAB00958R2-01-00_07	VARIAC ANGLE 1	1	REV 02
14	RCAB00958R2-01-00_08	VARIAC ANGLE 2	1	REV 02
15	RCAB00958R1-01-00_09	VARIAC TOP CHANNEL	1	REV 01
16	RCAB00958R0-01-00_10	CONTACTOR PLATE	1	REV 01
21	RCAB00958R0-01-00_14	M5 X 12 SPACER	8	REV 00
22	RCAB00958R0-01-00_15	TERMINAL MOUNTING PIECE 1	2	REV 00
23	RCAB00958R0-01-00_16	TERMINAL MOUNTING PIECE 2	4	REV 00
21	RCAB00958R0-01-00_18	M4 X 10 MM CSK WELD SCREW	6	REV 00
22		SENSING PLATE	1	

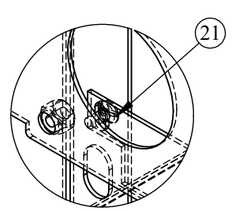

DETAIL W
SCALE 1 : 2

NOTES - UNLESS OTHERWISE SPECIFIED:

1. FINISH: POWDER COATED - FRAME - 7035, ALL COVERS - 7016 (TEXTURE)
2. DIMENSIONS ARE TO BE INTERPRETED AS PER ASME Y14.5M - 1994.
3. ALL DIMENSIONS APPLY AFTER FINISHING.
4. PART TO BE CLEAN AND FREE OF ALL SHARP EDGES BURRS, CHIPS, SHAVINGS AND OILS BOTH INTERNALLY AND EXTERNALLY.
5. ALL BEND RADIUS AND RELIEFS TO BE MINIMUM.
6. ALL DIMENSIONS ARE IN MM.
7. UNLESS OTHERWISE SPECIFIED DIMENSIONS REFER DXF DRAWING.

SUPERSEDES:									NAME	DATE/SIGN
MATERIAL:								DRAWN	SUDHAGAR	08.10.2024
WEIGHT: 22806.95G				THK: MM				CHK'D		
FINISH: SEE NOTES								APPV'D	BALRAM	
TOLERANCES UNLESS OTHERWISE SPECIFIED								STATUS: REV 03		
LINEAR DIMENSION										
0.5-3	3-6	6-30	30-120	120-400	400-1000	1000-2000	2000-4000			
±0.5	±0.5	±1	±2	±3	±4	±5	±10			
ANGLER DIMENSION					EXTERNAL RADII & CH			THIRD ANGLE PROJECTION:		
0-10	10-50	50-120	120-400	OVER 400	0.5 - 3	3 - 6	OVER 6			
±1°	±0.30°	±0.30°	±0.10°	±0.5°	±0.2	±0.5	±1			

Fuji Electric

DOC TYPE: MECHANICAL DRAWING

PRODUCT: 12-15KVA SCVS DM DG

TITLE: FRAME ASSY

DWG NO: RCAB00958R3-01

SIZE: A3

1:6

1 OF 28

PROPERTY AND CONFIDENTIAL : THE INFORMATION CONTAINED IS THIS DRAWING IS THE SOLE PROPERTY OF CONSUL NEOWATT POWER SOLUTIONS PVT LTD. ANY REPRODUCTION IN PART OR AS A WHOLE WITHOUT THE WRITTEN PERMISSION OF CONSUL NEOWATT POWER SOLUTIONS PVT LTD IS PROHIBITED.